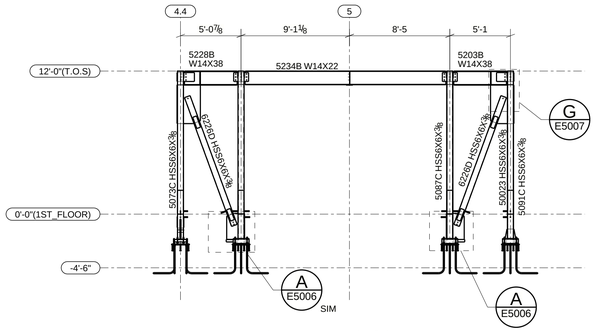

10.-BRACE FRAME ELEVATION @ GRID LINE A.4
(REF:5/S3-5.1)

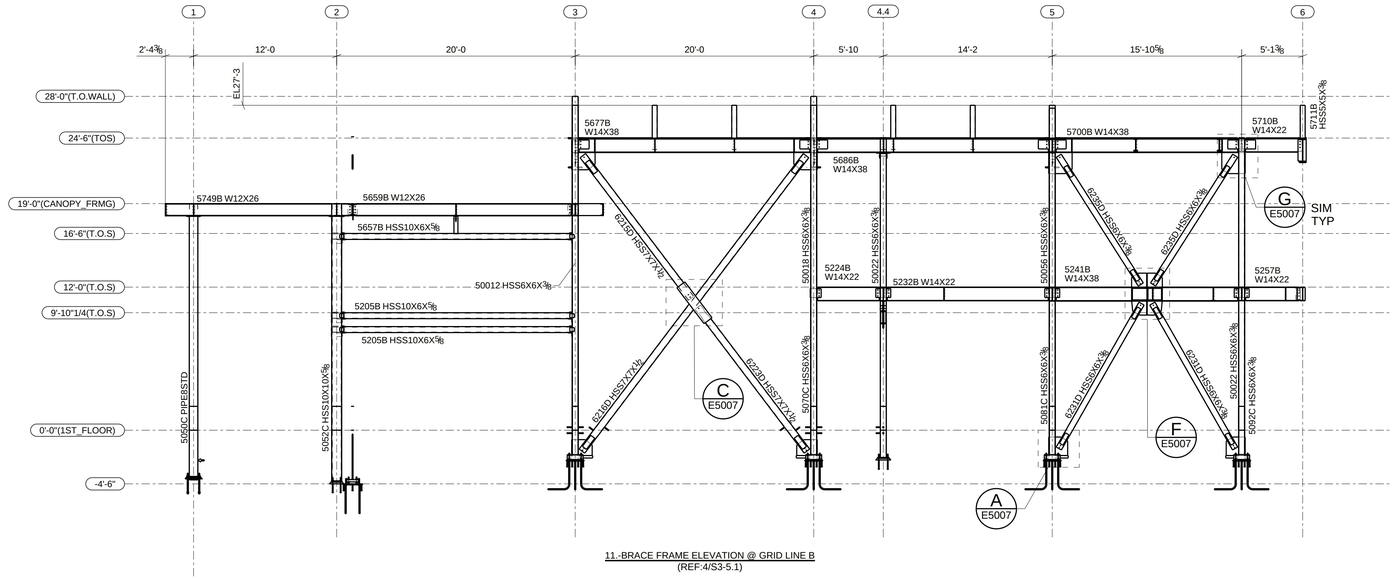

11.-BRACE FRAME ELEVATION @ GRID LINE B
(REF:4/S3-5.1)

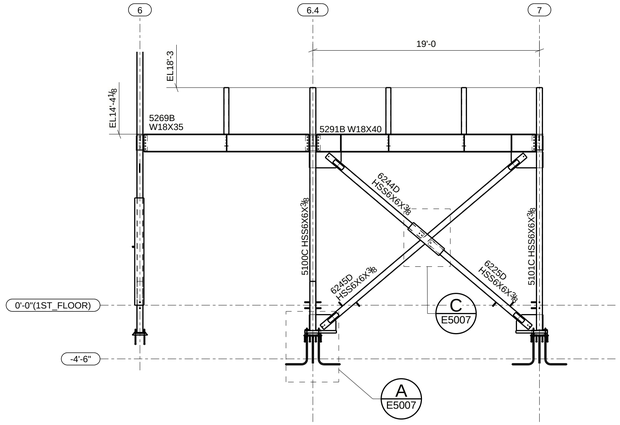

12.-BRACE FRAME ELEVATION @ GRID LINE C
(REF:3/S3-5.1)

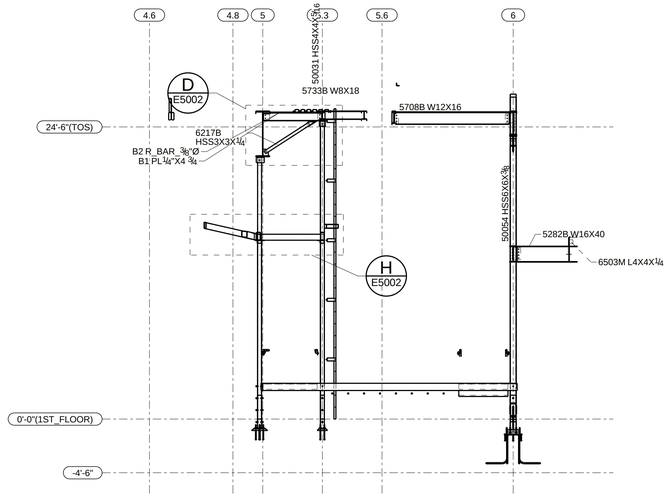

13.- ELEVATION @ GRID LINE C.6

SYMBOLOGY

- N/S -NEAR SIDE MARK
- F/S -FAR SIDE MARK
- B/S -NEAR SIDE BOLT MARK
- E.I. -EXCEPT INDICATED
- -NEAR SIDE HOLE
- -FAR SIDE HOLE
- EL -LEVEL
- W.P. -WORK POINT
- CL -CENTER LINE
- -CONNECTING SIDE
- RD -RUN DIMENSION

REV.	DATE	DESCRIPTION
A		FOR INFORMATION
-		FOR APPROVAL

DSENCO
STEEL DETAILING AND ENGINEERING SERVICES
WWW.dsenco.com

CUSTOMER LOGOTYPE

NOTES:

REFERENCE DRAWINGS:

PROJECTION

ISSUE PURPOSE
- [x] FOR INFORMATION
- [ ] PRELIMINARY
- [ ] FOR APPROVAL
- [ ] FOR FABRICATION
- [ ] FINAL
- [ ] ASBUILT

THIS CONFIDENTIAL DOCUMENT IS THE PROPERTY OF XXXXX AND SHALL NOT GIVEN, COMMUNICATED, COPIED OR REPRODUCED EXCEPT WITH OUR WRITTEN PERMISSION.

PROJECT:
AREA:
LOCATION:
CLIENT:

DRAWN BY:
REVISED BY:
ISSUE DATE:
DATE:
ESCALA: NO
PRIORITY: 0

DESCRIPTION: BRACE FRAME ELEVATION

DRAWING No./DWG No.: E5005

REV.: A

RECOMMENDED PRINT SIZE: ARCH_D (24"x36")